PROPOSED G + 11 STD. RESIDENTIAL BUILDING

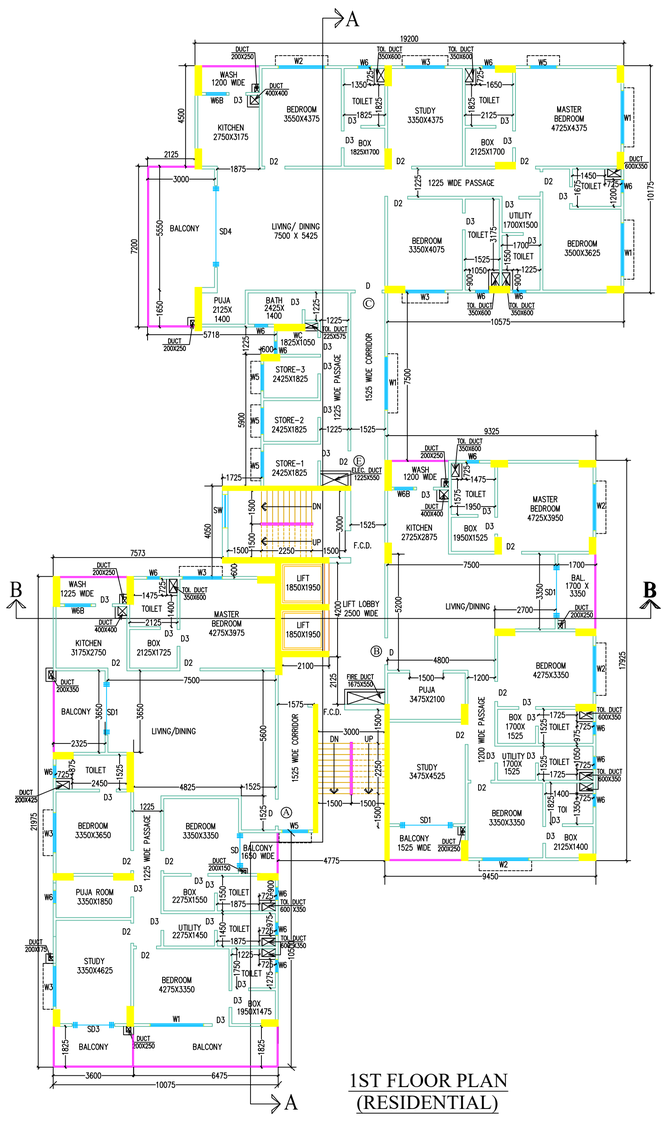

1ST FLOOR PLAN
(RESIDENTIAL)

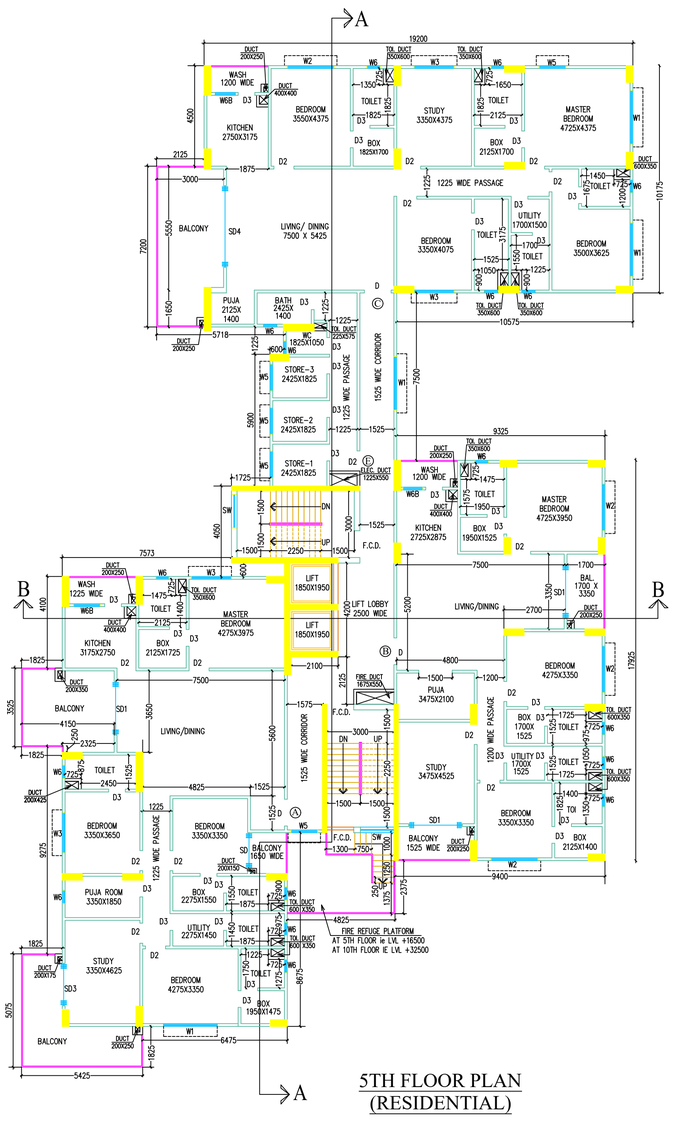

5TH FLOOR PLAN
(RESIDENTIAL)

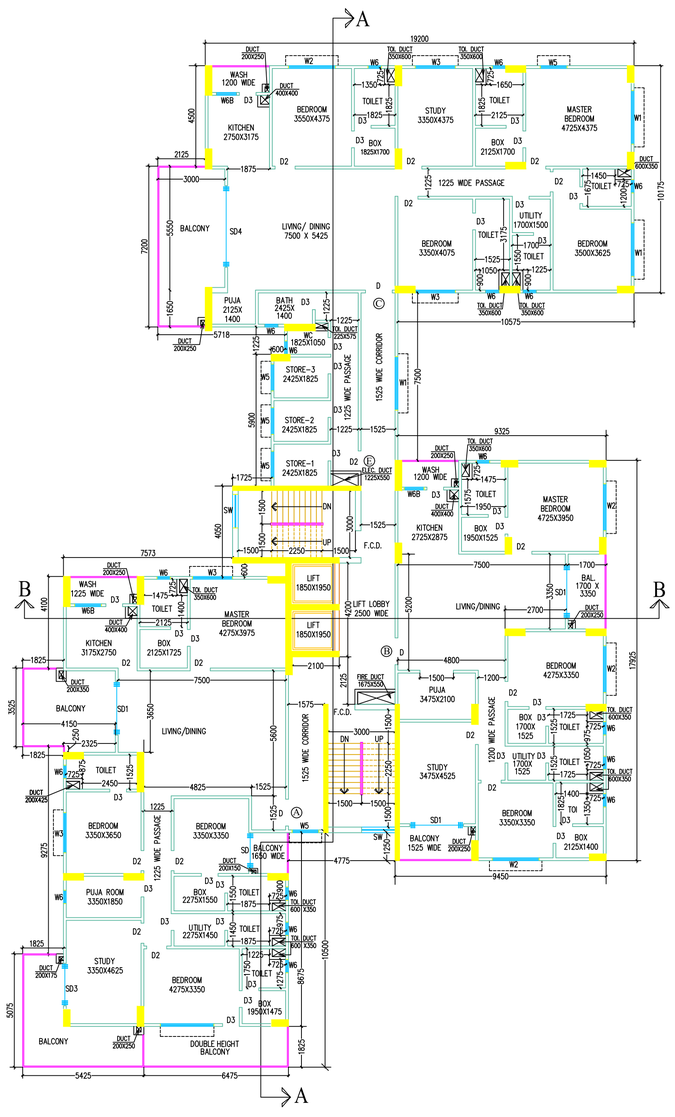

TYPICAL 2ND ,4TH, 6TH, & 8TH FLOOR PLAN
(RESIDENTIAL)

NAME OF OWNERS

1) SMT. SUSHILA DEVI MUNDHRA.
W/O. SRI MAHABIR PRASAD MUNDHRA.
2) SMT. SHANTI DEVI MUNDHRA.
W/O. SRI SITARAM MUNDRA.
3) SMT. PREM LATA MUNDHRA.
W/O. LATE BINOD KUMAR MUNDHRA.
4) SMT. SUDESH DEVI MUNDHRA.
W/O. LATE BASANT KUMAR MUNDHRA.
5) SRI MAHENDRA KUMAR MUNDHRA.
S/O. LATE SOHAN LAL MUNDHRA.
6) SRI MANOJ KUMAR MUNDHRA.
S/O. LATE BINOD KUMAR MUNDHRA.
7) SRI RAHUL MUNDHRA.
S/O LATE BASANT KUMAR MUNDHRA.
8) SRI RAJESH KUMAR MUNDHRA.
S/O SRI. SITA RAM MUNDHRA,
9) SMT. SANGITA PERIWAL,
W/O SRI. PRADIP KUMAR PERIWAL,
10) DELTA REALTORS
ALL ARE AT S.F. ROAD, SILIGURI, BABUPARA,
WARD NO. - 27(SMC), P.O. & P.S. SILIGURI,
DIST. DARJEELING.

LAND SCHEDULE. :-

MOUZA. :- SILIGURI.
J. L. NO. :- 110(88)
SHEET NO. :- 10
KHATIN NO.:- 1028
PLOT NO. :- 7202
P.O. & P.S. :- SILIGURI.
DIST. :- DARJEELING.
WARD NO. :- 27(SMC)
HOLDING NO - 7/860/82/97/63.

SITE ADDRESS . :-
STATION FEDDER ROAD,
WARD NO. :- 27(SMC)
MUNDHARA COMPOUND,
NEAR SILIGURI POLICE STATION,
SILIGURI.

DECLARATION BY OWNER & ARCHITECT

I do hereby declare that the building proposed for construction shall be supervised by the BA/LBS signing the building plan application or in this absence by any other BA/ LBS of the appropriate category and as approved by the authority.

Signature of Owner(s)

I / We do hereby certify that plans, elevations and sections and other structural details of the proposed building on Plot No- 7202,, Ward No.27 under the jurisdiction of Siliguri Municipal Corporation have been prepared in conformity with the relevant provisions under the West Bengal Municipal (Building) Rules, 2007. This is also to certify that all relevant "No Objection" Certificates from the respective Authorities such as Fire and Emergency Services Department, Airport Authority, Pollution Control Board, Telecommunication Department, etc as applicable in this regard, are also enclosed with the application for seeking approval of the plan to construct/ reconstruct/ addition to/ alteration of the building on the said plot.

Signature of Architect

I do hereby certify that the building site proposed for construction on Plot No - 7202,Street S.F. Road,Ward No 27, under the jurisdiction of Siliguri Municipal Corporation have been visited by me,and all the designs, drawings Nos.1,2,3,4,5,6 & 7,Soil Test Report and Load Test Results for foundation and superstructure have been duly reviewed confirming to stipulations of all latest relevent IS Code of Practice and National Building Code and it is found that everything is completely in order and the proposed foundation and superstructures are safe in all respect.

Signature of Structural Reviewer

I/ We do hereby certify that the foundation and superstructure of the building proposed for construction on Plot No - 7202, Ward No 27, under the jurisdiction of Siliguri Municipal Corporation have been personally inspected and so designed by me / us will make such foundation and superstructure safe in all respect including the consideration of bearing capacity and settlement of soil and other conditions, if any, conforming to the stipulation of all relevant IS Code of Practice and National Building code.

Signature of Geo-Tecnical Engineer

Signature of Structural Engineer

SCALE
1 : 100

N

SHEET NO. 3/7