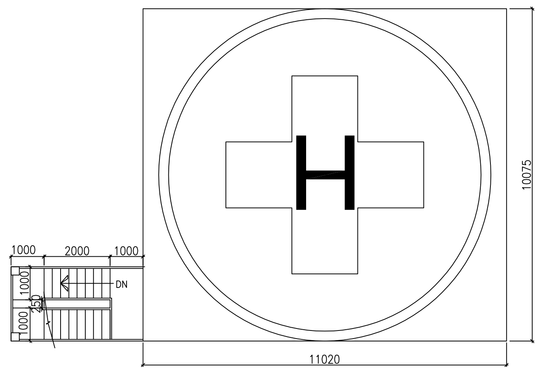

PART PLAN FOR HELIPAD

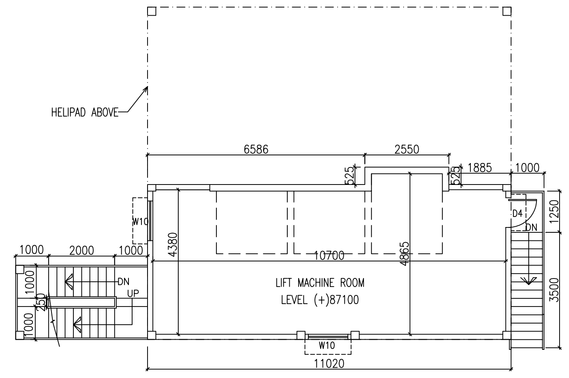

PART PLAN OF LIFT MACHINE ROOM

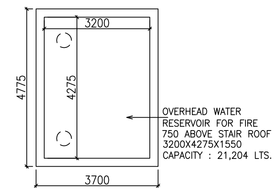

PART PLAN OF
OVERHEAD WATER RESERVOIR

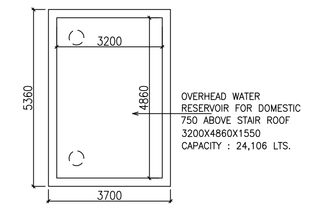

PART PLAN OF
OVERHEAD WATER RESERVOIR

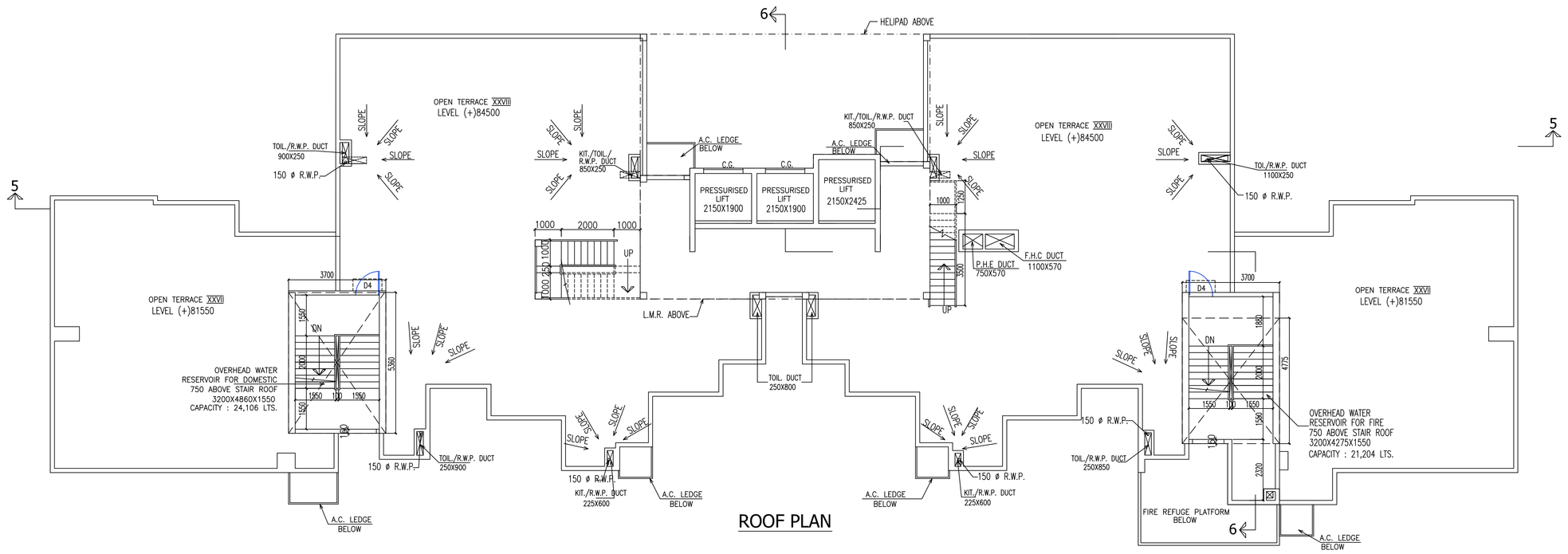

ROOF PLAN

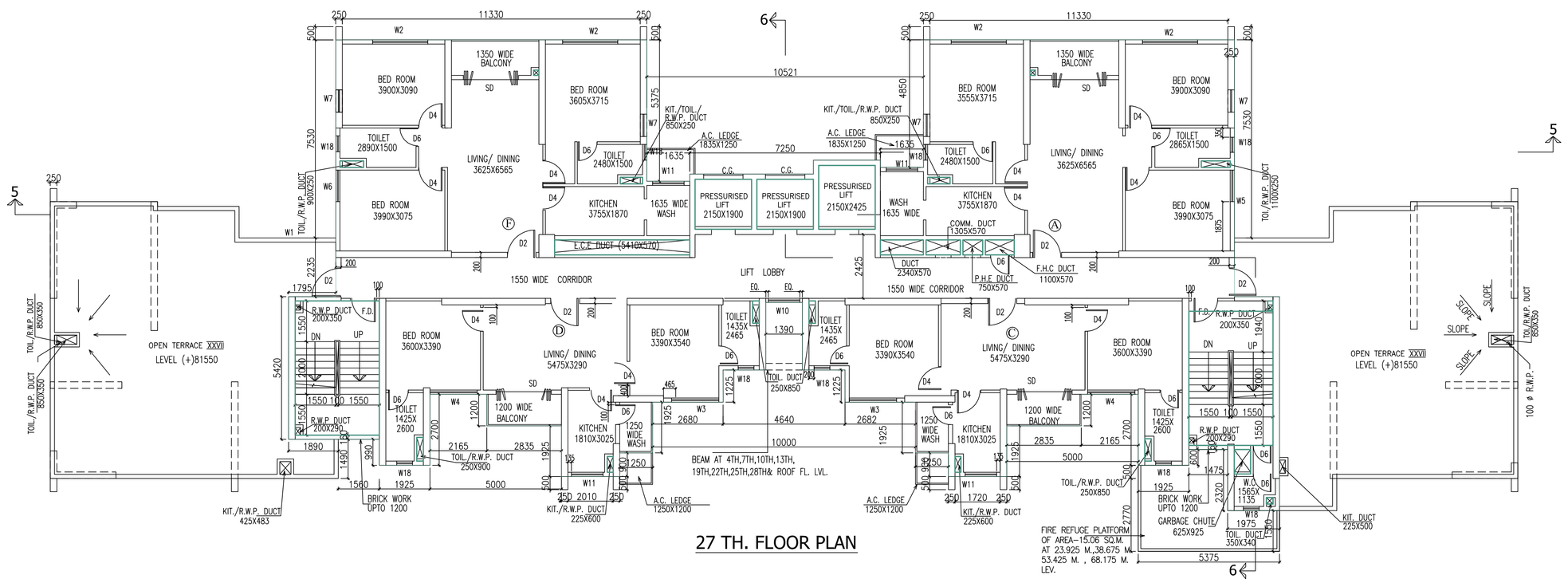

27 TH. FLOOR PLAN

SCHEDULE OF DOORS & WINDOWS			
	SILL	LINTEL	SIZE
DW1	-	2400	2400X2400
D1	-	2150	1500X2150
D1a	-	2150	2100X2150
D2	-	2150	1100X2150
D3	-	2150	1000X2150
D4	-	2150	900X2150
D5	-	2150	800X2150
D6	-	2150	750X2150
F.D.	-	2150	1000X2150
F.D.1	-	2150	1100X2150
SD	-	2150	2100X2150
SD1	-	2150	1800X2150
SD2	-	2150	1600X2150
W1	350	2150	2400X1800
W2	350	2150	2100X1800
W3	350	2150	1800X1800, 1100X1800
W4	350	2150	1800X1800
W4A	350	2150	1800X1800
W5	350	2150	1500X1800
W6	350	2150	1200X1800
W7	350	2150	850X1800
W8	350	2150	720X1800
W9	950	2150	1500X1200
W10	950	2150	1200X1200
W11	1100	2150	1200X1050
W12	1100	2150	900X1050
W13	1100	2150	925X1050 625X1050
W14	1100	2150	750X1050 725X1050
W15	1100	2150	750X1050 625X1050
W16	1100	2150	700X1050
W17	1100	2150	600X1050
W17a	1100	2150	400X1050
W18	1250	2150	600X900
W19	1250	2150	425X900
V	2250	2750	750X500
V1	2200	2600	1200X400
V2	2200	2600	700X400

SUKRIT CHATTERJEE

Digitally signed by SUKRIT CHATTERJEE
DN: c=IN, o=Personal, postalCode=700047, st=West Bengal, serialNumber=5dd7216c6b446304fa0f4f227127240b2e310b9ef5b1504fb693a26768de24e1, cn=SUKRIT CHATTERJEE
Date: 2015.08.20 16:21:23 +05'30'

CERTIFICATE OF GEO TECHNICAL ENGINEER:

IT IS CERTIFIED THAT THE COMPREHENSIVE GEO-TECHNICAL REPORT ON SOIL INVESTIGATION HAS BEEN PREPARED BY ME FOR DESIGN AND CALCULATION OF THE FOUNDATION BY ANALYZING THE SOIL SAMPLES FOR ESTIMATING THE BEARING CAPACITY OF THE SOIL ON WHICH FOUNDATION OF THE STRUCTURE WILL BE CONSTRUCTED.I SHALL ALSO CHECK THE NATURE OF THE SOIL AFTER EXCAVATION AT SITE SO THAT FOUNDATION IS EXTENDED UP TO APPROPRIATE DEPTH THAT HAS BEEN PROPOSED IN THE GEO-TECHNICAL REPORT.

SIGNATURE OF GEOTECHNICAL ENGINEER
Shyamal Kumar Mitra
Enrolment No. GTER - HIDCO /09/00010

CERTIFICATE OF ARCHITECT

I CERTIFY THAT ALL THE ARCHITECTURAL DRAWINGS OF THE PROJECT AT PLOT NO. III E/4 & E/4/1 ACTION AREA – III, NEW TOWN, KOLKATA, HAVE BEEN PREPARED BY ME COMPLYING WITH THE NEW TOWN KOLKATA BUILDING RULES, 2009. I ALSO CERTIFY THAT THE PLANS AND DRAWINGS PREPARED BY ME COMPLY WITH ALL PROVISIONS REGARDING THE FIRE PROTECTION AS PER THE PREVAILING NATIONAL BUILDING CODE. I SHALL BE HELD RESPONSIBLE IF ANY INCORRECT INFORMATION IN FURNISHED BY ME OR ANY VIOLATION OF PROVISIONS OF THESE RULES OR THE PREVAILING NATION AL BUILDING CODE IS FOUND IN ANY OF THE DRAWINGS AND DOCUMENTS, SIGNED BY ME AND SUBMITTED TO THE SANCTIONING AUTHORITY FOR OBTAINING SANCTION.

SIGNATURE OF ARCHITECT
MONAL AGRAWAL
ACHR/ NKDA/ 10/ 00020

CERTIFICATE OF STRUCTURAL ENGINEER/ CIVIL ENGINEER.

CERTIFIED THAT THE STRUCTURAL DRAWING AND DESIGN OF BOTH THE FOUNDATION AND SUPERSTRUCTURE OF THE BUILDING/BUILDINGS HAS BEEN MADE CONSIDERING THE SOIL TEST REPORT, (AS PER THESE RULES AND THE REGULATIONS MADE UNDER THE ACT) AND ALSO CONSIDERING ALL POSSIBLE LOADS, SEISMIC LOAD AND THE MOMENTS GENERATED BY THE PROPOSED STRUCTURE AS PER THE BUREAU OF INDIAN STANDARD AND NATIONAL BUILDING CODE OF INDIA AND CERTIFIED THAT IT IS SAFE AND STABLE IN ALL RESPECT AND THESE PROVISIONS SHALL BE ADHERED TO DURING THE CONSTRUCTION.

SIGNATURE OF STRUCTURAL ENGINEER/ CIVIL ENGINEER.
SANJIV PAREKH
STER/ NKDA/ 10/ 00030

SIGNATURE OF OWNER
Koushik Bhattacharya
Elita Garden Vista Project Private Ltd.
3/1, Dr U N BRAMACHARI STREET.
Kolkata 700017

SIGNATURE OF PUBLIC HEALTH ENGINEER.
Dwaink Nath Ghose
PHER/ NKDA/ 10/ 00006

SIGNATURE OF TOWN PLANER
Barnika Chattopadhyay
TPER/ NKDA/ 10/ 00022

SIGNATURE OF ELECTRICAL ENGINEER.
Dipankar Banerjee
ELER/ NKDA/ 10/ 00013

DRAWING NO. - A-10	SHEET NO. - 10 OF 26	REVISION NO. -

TITLE-

27 TH. FLOOR PLAN , ROOF PLAN,PART PLAN OF L.M.R. & PART PLAN OF HELIPAD

BLOCK-8

PROJECT-

PROPOSED ADDITION & ALTERATION PLAN FOR RESIDENTIAL BUILDING OF (G+14) STORIED (BLOCKS-1,16), (G+17) STORIED (BLOCKS-2,15),(G+21) STORIED (BLOCKS-6),(G+18) STORIED (BLOCKS-7), (G+27) STORIED (BLOCKS-8), (G+18) STORIED (BLOCKS-9), (G+21) STORIED (BLOCKS-10), (G+27) STORIED (BLOCKS-11),(G+30) STORIED (BLOCKS-12,13), (G+24)STORIED(BLOCKS-3,14),(G+29)STORIED (BLOCKS-4,5), (G+1)STORIED (CLUB) 2NOS , & (B+G+8) STORIED (UTILITY & FACILITIES) AT PLOT NO. - III E/4 & E/4/1 ACTION AREA - III, NEW TOWN, KOLKATA.

ARCHITECTS

AGRAWAL & AGRAWAL
BARODA KOLKATA

SCALE	DATE	DEALT	CHECKED
1 : 100	05.08.15	SAMPA K.,RAJAT, SUDIPTA,ANINDITA	SHILA, SOURAV